XTENDER Mode

APPLICATION NOTE

Doc. - Ref. 240-XT
Version : March 2014

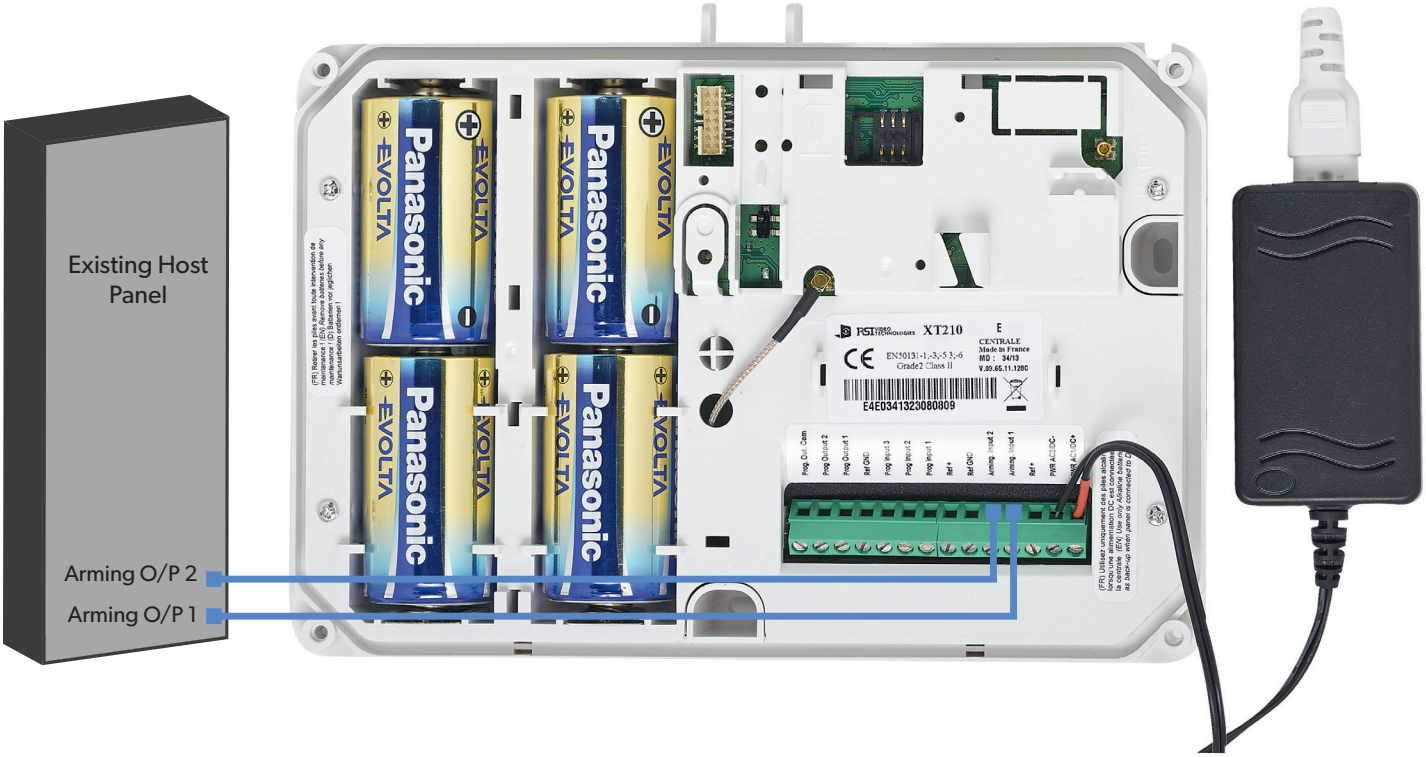

Index

1. **Introduction** — **Page 2**

2. **Arming and disarming from 9-12 V_{DC}** — **Page 3**
   - 2.1 **Master system with external 12 V_{DC}** — **Page 4**
   - 2.2 **Master system with dry contact** — **Page 4**

3. **Arming and disarming from a XT master system.** — **Page 5**

The XT Videofied® alarm panel and its variants can be used as standard standalone alarm system but it can also be connected to an existing alarm system capable of latching a 9-12 V_{DC} voltage used for its arming/disarming.

Thanks to a electrical relay, an XT panel can also arm or disarm other XT panels. The panel can also be armed by a master system or an external power supply with a switch.

This application note describes how to set up the XT panel for XTENDER use.

The XT panels used in XTENDER or used as master system must be powered by an AC power supply.

When the XT panel is used in XTENDER mode, the system will only be able to arm and disarm by latching 9-12 V_{DC} to its arming inputs Arming Input 1 and/or Arming Input 2. When voltage is 0V, the panel automatically disarms. If the XT is used as a master system, it does not generate a constant voltage but an electrical pulse (limited to 15 minutes), you will need to use an impulse relay.

How to parameter a XT for arming/disarming with any master system supplying 9-12 V_{DC} or a dry contact ?

XTENDER mode should be set up during the panel initial configuration.

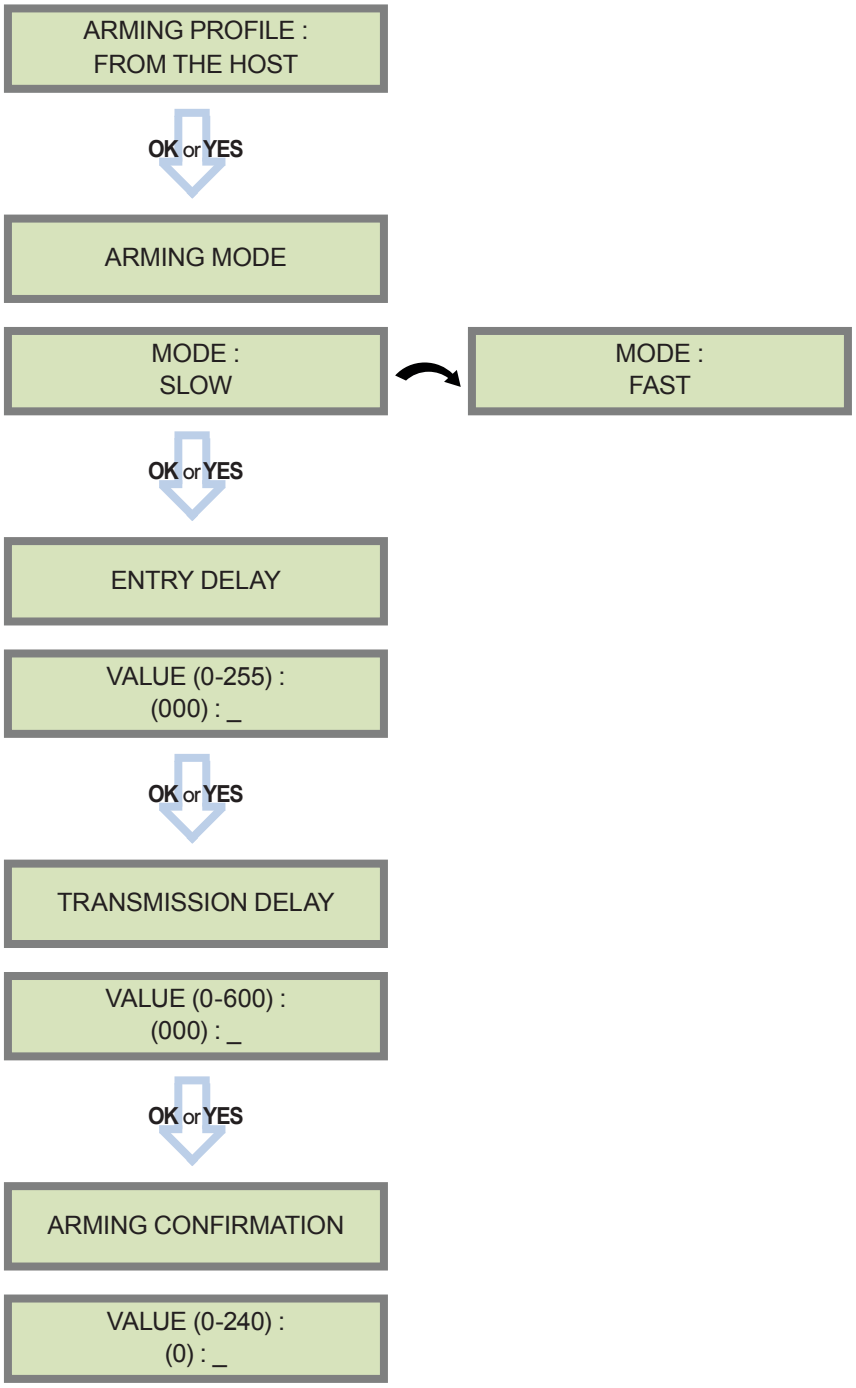

MODE SLOW : The panel will arm each device one at a time saving battery life. This mode is recommended.

MODE FAST : The panel will arm all devices at the same time. This mode increases significantly the battery consumption.

OK or YES to choose the parameter.

Enter the value for your Entry Delay up to 255 seconds and press **OK or YES.**

Note : In From the Host mode, the entry/exit delay are dealt by the master system.

The transmission delay value set the delay between the detection of an event and its transmission to the monitoring center.

Except when specifically required, please enter 0.

Enter the value you would like for the Transmission Delay and press **OK or YES.**

Arming Confirmation is the number of seconds the system will wait to arm after voltage is latched on the arming input. This feature can be used as an exit delay, we suggest you to enter the same value as your master system exit delay.

Enter the value you would like for the Arming Confirmation and press **OK or YES.**

Arming Inputs :

In XTENDER mode, the system devices are divided into two partitions. Those partitions are controlled either by Arming Input 1 or Arming Input 2.

When a voltage is applied to Arming Input 1, only the devices in areas 1 & 2 are armed

When a voltage is applied to Arming Input 2, only the devices in areas 3 & 4 are armed

2.1 Master system with external 12 V_{DC}

The master panel supplies 12 V_{DC}. The wiring scheme is as follow :

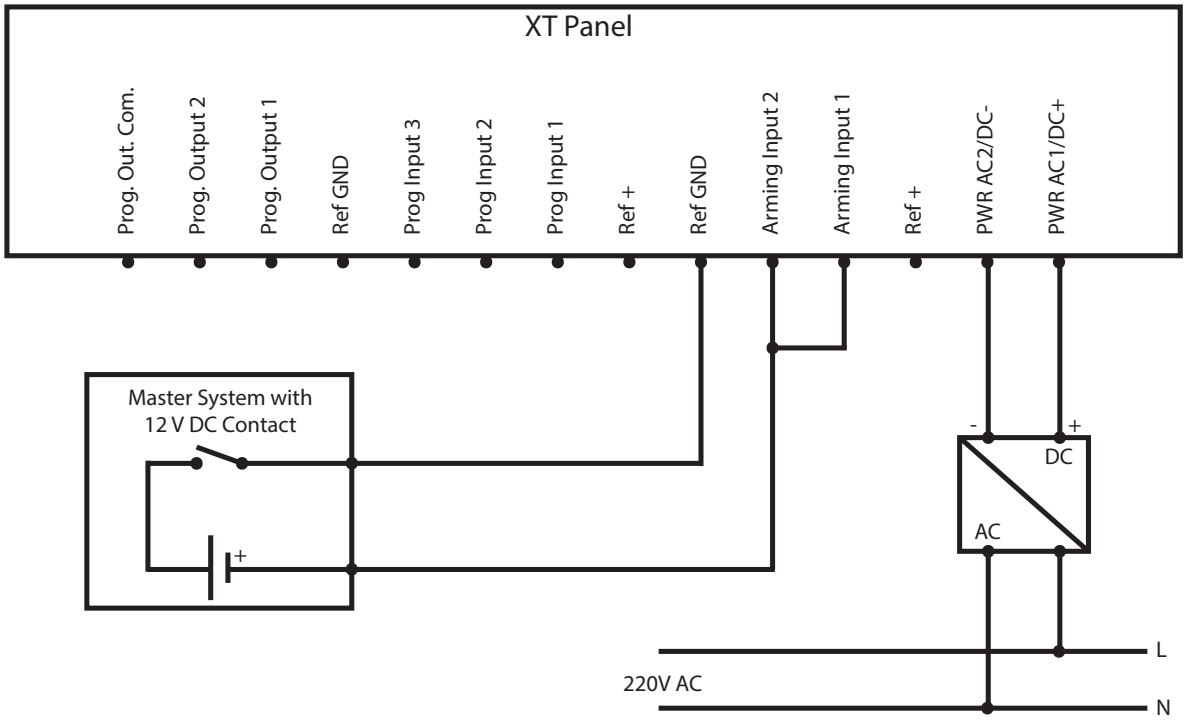

2.2 Master system with dry contact

The master system opens or closes a dry contact to command the XT arming/disarming. The wiring scheme is as follow :

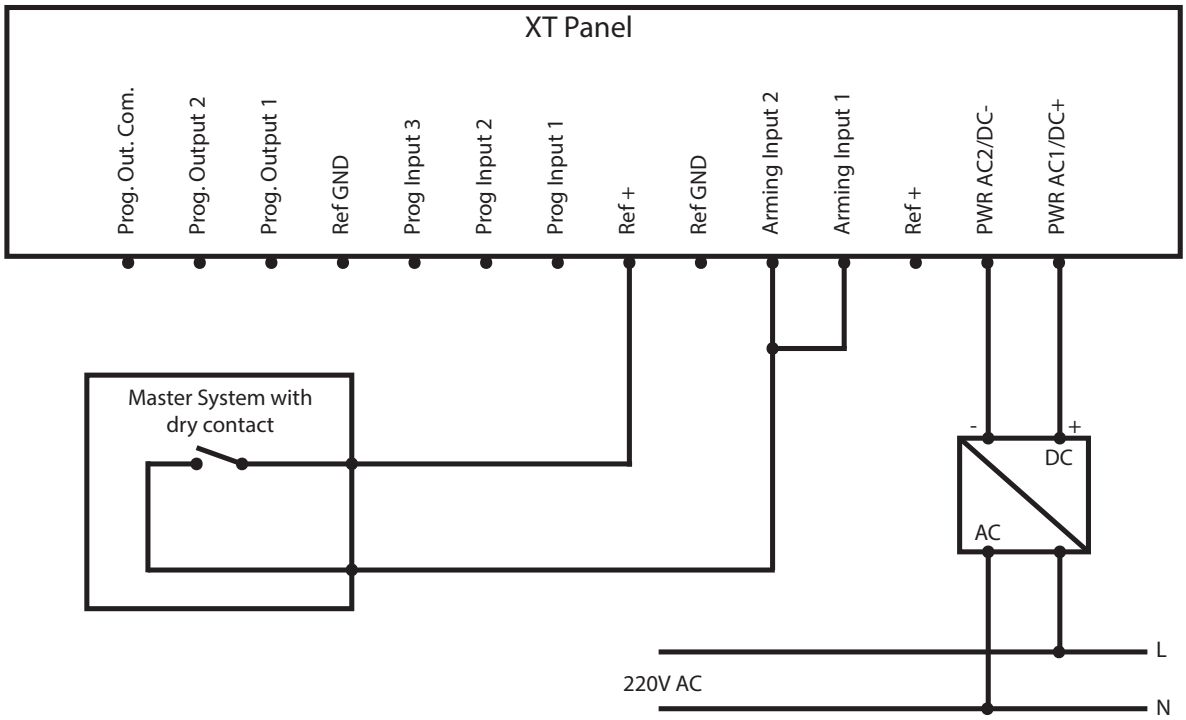

3. Arming and disarming from a XT master system

You can connect one or several panels into a master slave system. One XT in STANDALONE mode will be the master panel and will pilot the arming and disarming of the slave panels.

Both master panel programmable outputs will switch the same relay*.

In the example below you can see that Prog. Output 1 triggers when the master XT is arming and Prog. Output 2 triggers when the master panel is disarming. Those outputs will switch a 12 V_{DC} impulse relay that will power the other panels arming inputs.

Both outputs cannot be active at the same time. For this mounting the LENGTH ACTIV parameter for those outputs must be short. We recommend a setup of 2 seconds.

By using several relays in parallel, you can control several slave panels.

* For more information about programmable outputs, please consult the following application note available on our support website :

EN - PANEL - PROG OUTPUTS - NOTE

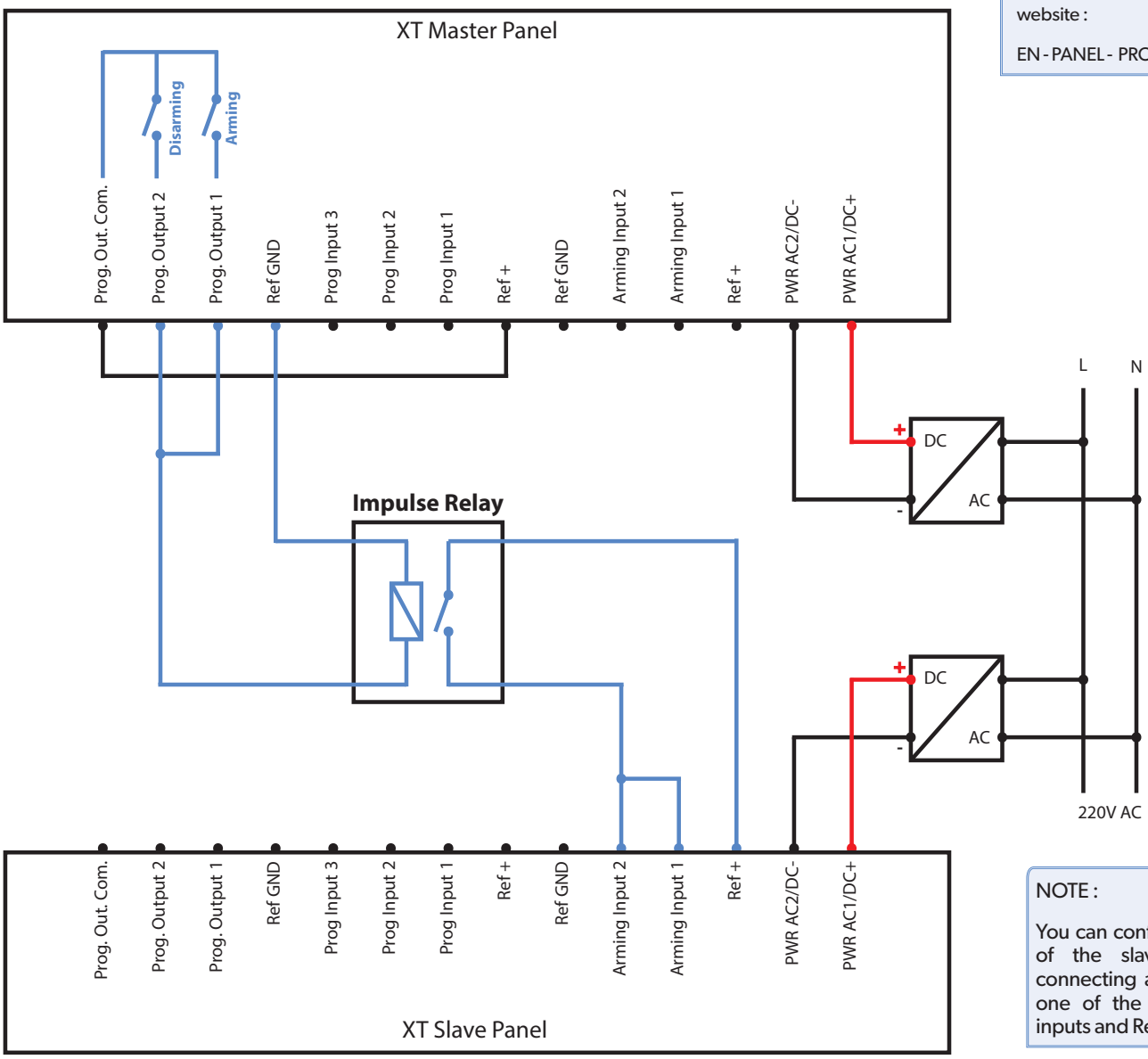

NOTE :

You can confirm the arming of the slave panels by connecting a LED between one of the active Arming inputs and Ref GND.

EMEA SALES
23, avenue du Général Leclerc
92340 BOURG-LA-REINE
FRANCE
E-Mail : emeasales@rsivideotech.com

North American Headquarters
1375 Willow Lake Blvd, Suite 103
Vadnais Heights, MN 55110
USA
E-Mail : usasales@rsivideotech.com